Product data sheet

Specifications

Circuit breaker, LA, 225A, 3 pole, 600VAC, 22kA, 250VDC, 10kA, lugs, thermal magnetic, short handle

LAL36225MB

Product availability: Non-Stock - Not normally stocked in distribution facility

Main

Product or Component Type	Circuit breaker
Range	PowerPact
Trip Unit Technology	Thermal-magnetic

Complementary

Line Rated Current	225 A
Number of Poles	3P
Mounting Mode	Unit mount
Magnetic Hold Current	1125 A
Magnetic Tripping Current	2250 A
Operator	Short lever
Electrical connection	Lugs, load Lugs, line
Terminal identifier	AL400LA
Tightening torque	115.06 lbf.in (13 N.m) 0.07…0.5 in² (42…304 mm²) (AWG 1...600 kcmil) 115.06 lbf.in (13 N.m) 0.07…0.2 in² (42…127 mm²) (AWG 1...250 kcmil)
Height	11 in (279.4 mm)
Width	6 in (152.4 mm)
Depth	5.84 in (148.34 mm)
Circuit breaker application	HACR rated

Environment

Certifications	IEC UL Listed CSA

Ordering and shipping details

Category	US10DE200935
Discount Schedule	0DE2
GTIN	785901137931
Returnability	No
Country of origin	MX

Price is “List Price” and may be subject to a trade discount – check with your local distributor or retailer for actual price.

Disclaimer: This documentation is not intended as a substitute for and is not to be used for determining suitability or reliability of these products for specific user applications

Packing Units

Unit Type of Package 1	PCE
Nbr. of units in pkg.	1
Package 1 Height	8.44 in (21.433 cm)
Package 1 Width	11.13 in (28.258 cm)
Package 1 Length	17.13 in (43.498 cm)
Package weight(Lbs)	16.16 lb(US) (7.33 kg)

Contractual warranty

Warranty	18 months

Environmental Data

Schneider Electric aims to achieve Net Zero status by 2050 through supply chain partnerships, lower impact materials, and circularity via our ongoing “Use Better, Use Longer, Use Again” campaign to extend product lifetimes and recyclability.

Environmental Data explained

How we assess product sustainability

Environmental footprint

Environmental Disclosure	Product Environmental Profile

Use Better

Materials and Substances

Packaging made with recycled cardboard	Yes
Packaging without single use plastic	Yes
EU RoHS Directive	Compliant with Exemptions
SCIP Number	45160aaa-1457-439f-bca7-7bd5246ac23e
REACh Regulation	REACh Declaration
California proposition 65	WARNING: This product can expose you to chemicals including: DINP, which is known to the State of California to cause cancer, and DIDP, which is known to the State of California to cause birth defects or other reproductive harm. For more information go to www.P65Warnings.ca.gov
Halogen content performance	Halogen free plastic parts product
PVC free	Yes

Use Again

Repack and remanufacture

Circularity Profile	No need of specific recycling operations
Take-back	No

Technical Illustration
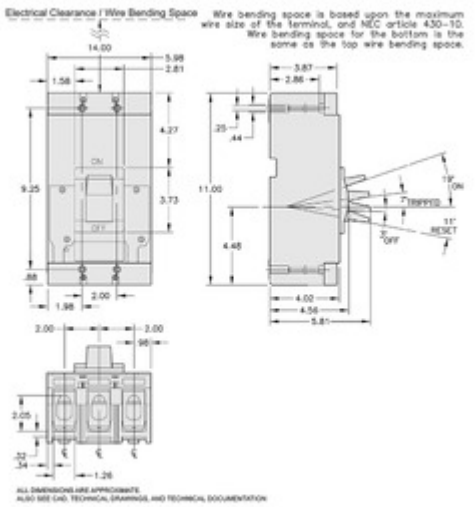
Dimensions